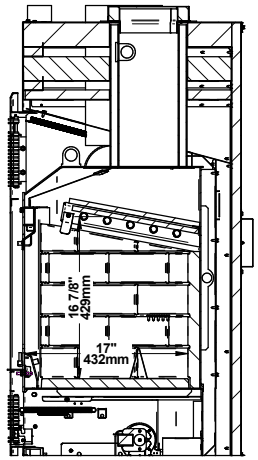
16 7/8"
429mm
17"
432mm

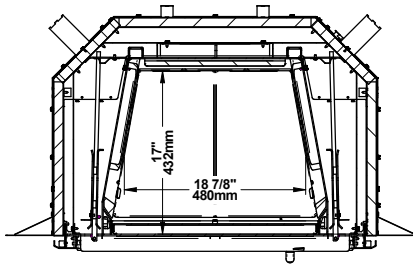
17"
432mm
18 7/8"
480mm

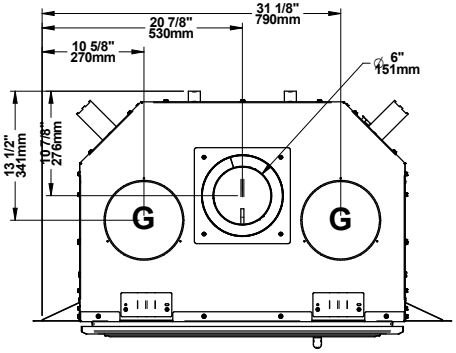
31 1/8"
790mm
20 7/8"
530mm
10 5/8"
270mm
6"
151mm
13 1/2"
341mm
10 7/8"
276mm
G
G

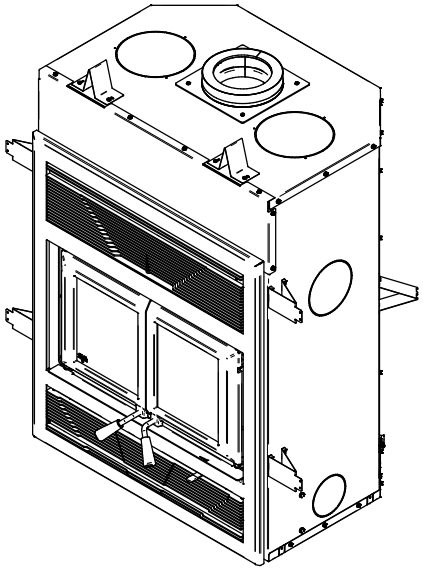

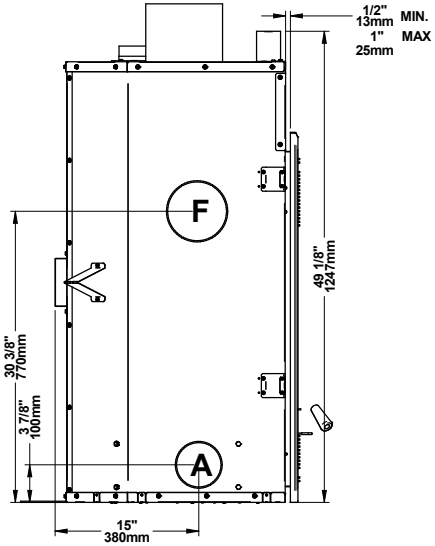
1/2"
13mm
MIN.
1"
25mm
MAX
F
A
30 3/8"
770mm
3 7/8"
100mm
49 1/8"
1247mm
15"
380mm

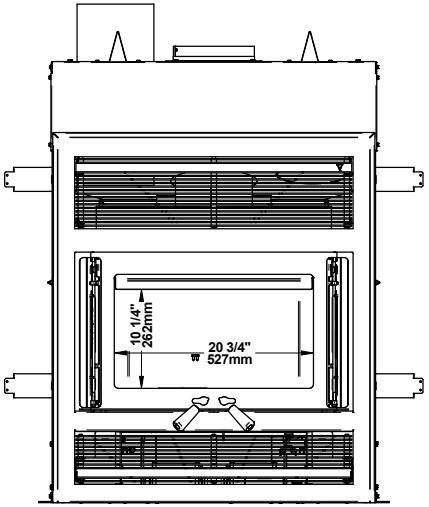
10 1/4"
262mm
20 3/4"
527mm

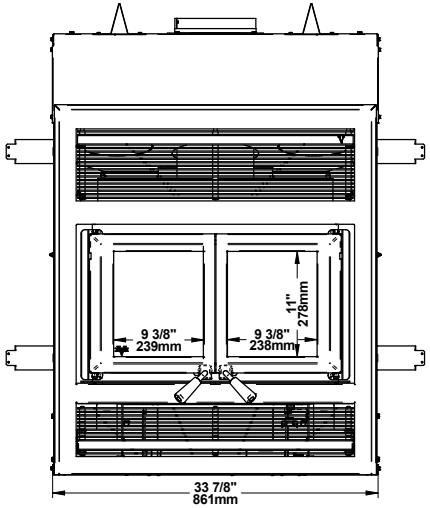
9 3/8"
239mm
9 3/8"
238mm
11"
278mm
33 7/8"
861mm

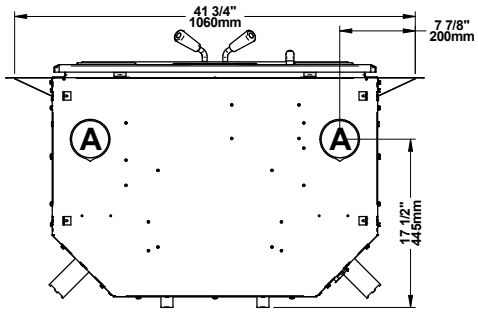
41 3/4"
1060mm
7 7/8"
200mm
A
A
17 1/2"
445mm

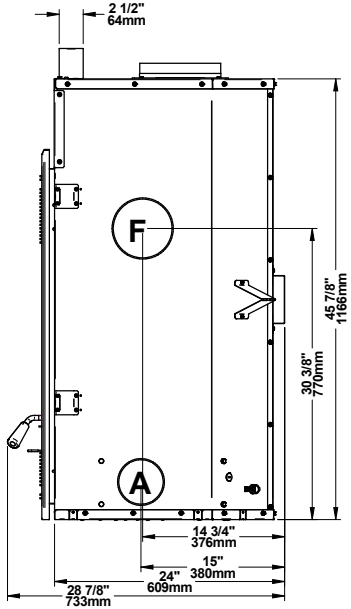
2 1/2"
64mm
F
A
45 7/8"
1166mm
30 3/8"
770mm
14 3/4"
376mm
15"
380mm
24"
609mm
28 7/8"
733mm