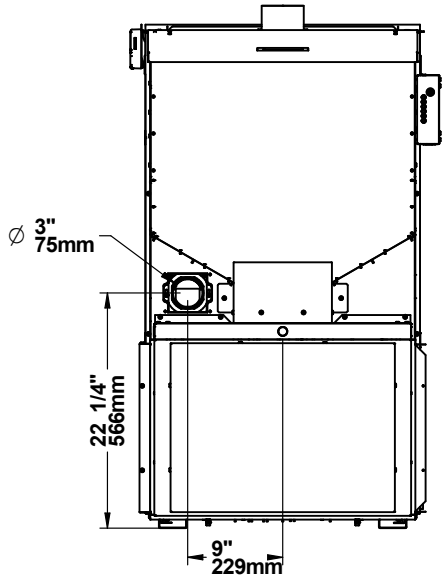
∅ 3"
75mm
22 1/4"
566mm
9"
229mm

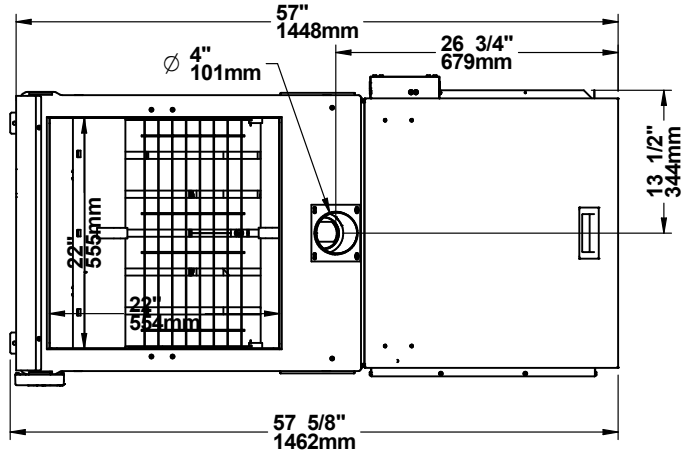
57"
1448mm
26 3/4"
679mm
∅ 4"
101mm
13 1/2"
344mm
22"
555mm
22"
554mm
57 5/8"
1462mm

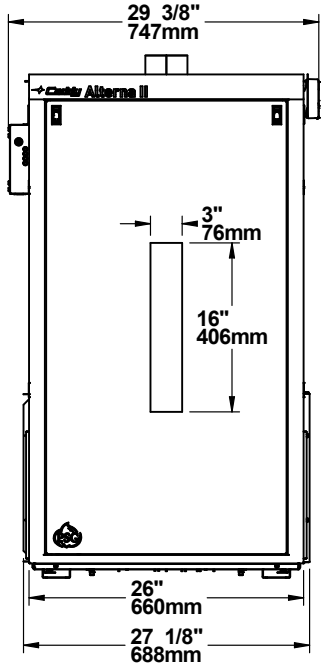
29 3/8"
747mm
Alterna II
3"
76mm
16"
406mm
26"
660mm
27 1/8"
688mm

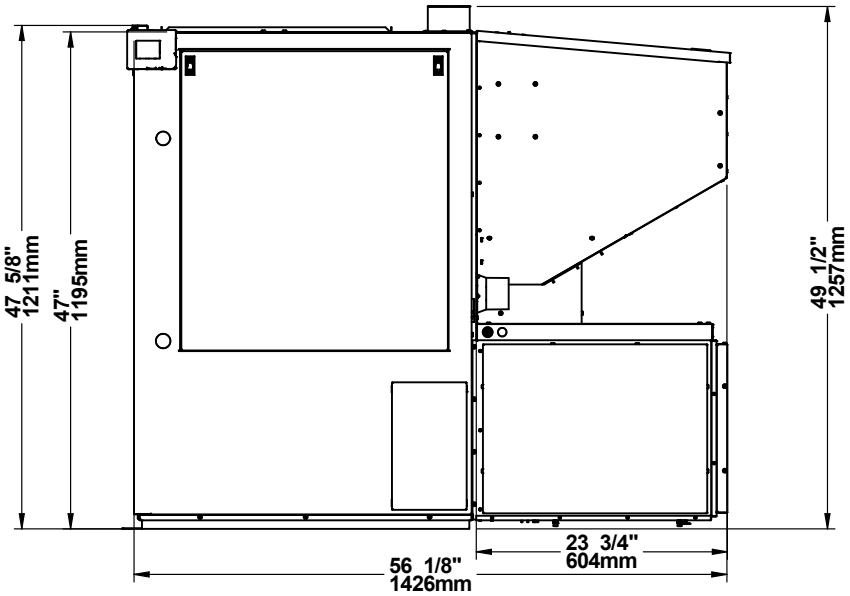
47 5/8"
1211mm
47"
1195mm
49 1/2"
1257mm
23 3/4"
604mm
56 1/8"
1426mm