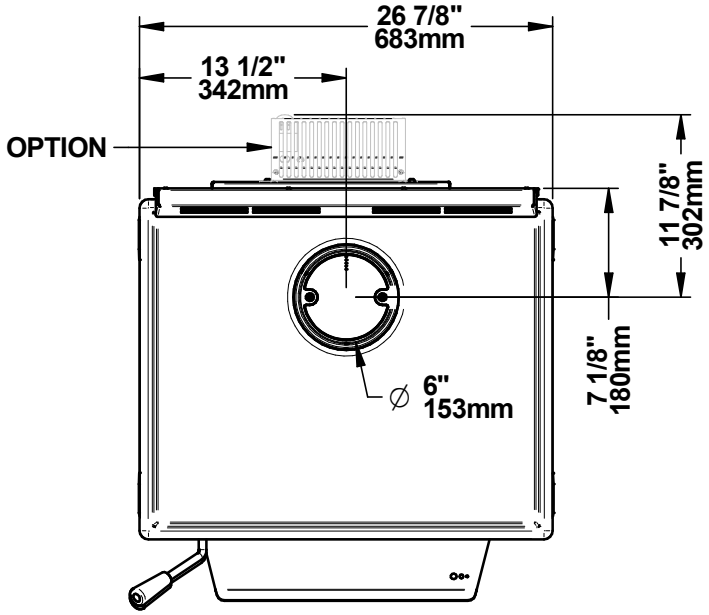
26 7/8"
683mm
13 1/2"
342mm
OPTION
11 7/8"
302mm
7 1/8"
180mm
∅ 6"
153mm

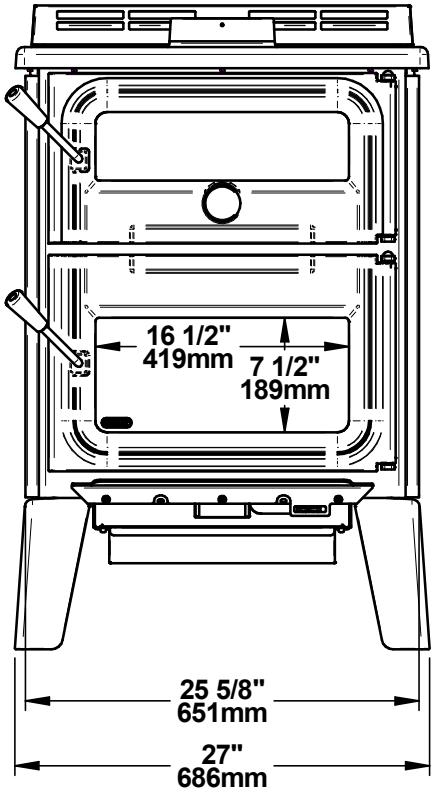
16 1/2"
419mm
7 1/2"
189mm
25 5/8"
651mm
27"
686mm

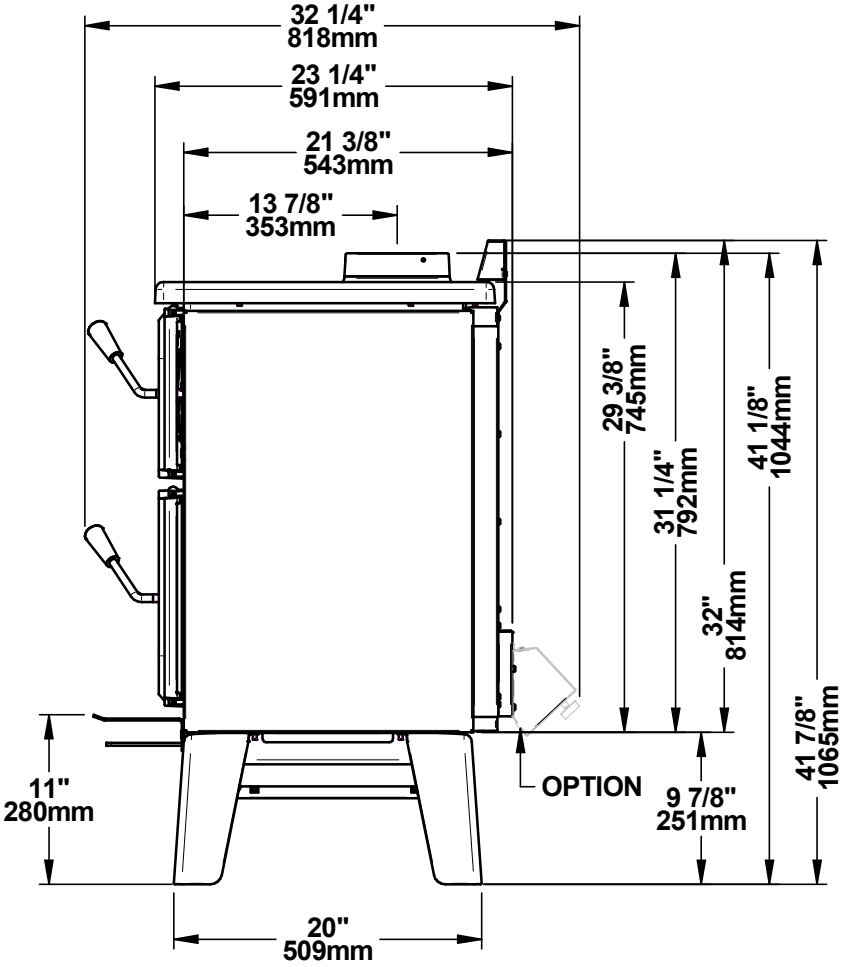
32 1/4"
818mm
23 1/4"
591mm
21 3/8"
543mm
13 7/8"
353mm
29 3/8"
745mm
31 1/4"
792mm
32"
814mm
41 1/8"
1044mm
41 7/8"
1065mm
11"
280mm
OPTION
9 7/8"
251mm
20"
509mm

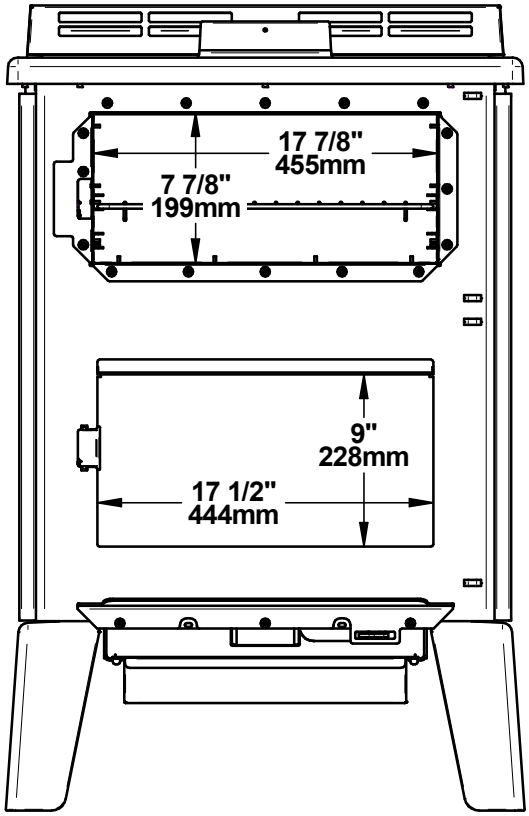
17 7/8"
455mm
7 7/8"
199mm
9"
228mm
17 1/2"
444mm

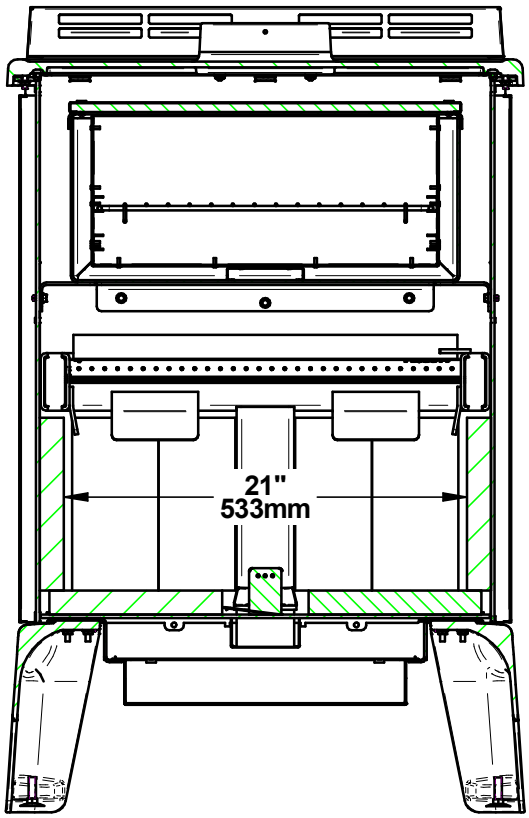
21"
533mm

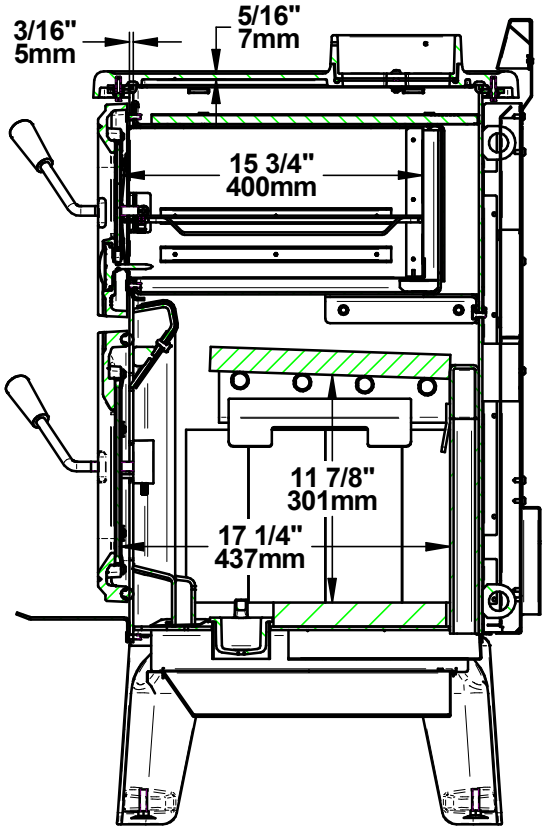
3/16"
5mm
5/16"
7mm
15 3/4"
400mm
11 7/8"
301mm
17 1/4"
437mm